AORAN INDUSTRY CO.,LIMITED

PROFESSIONAL LCD SUPPLIER FROM CHINA

ACM1602E

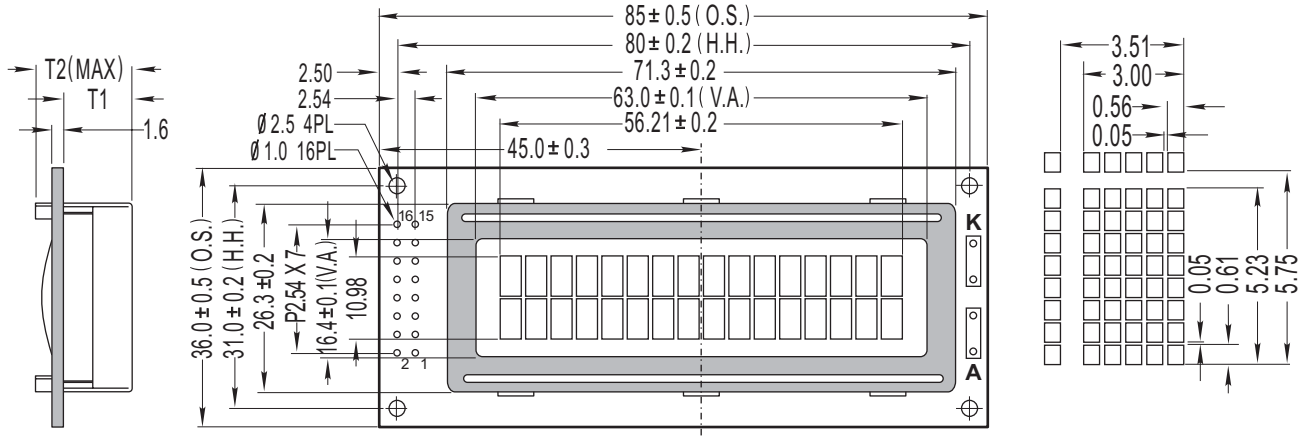

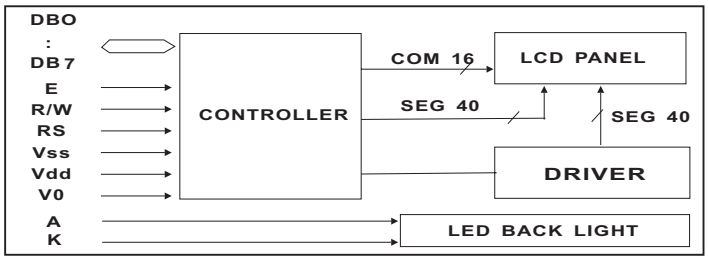

ITEM	T1	T2
LED backlight	9.6	14.5
EL / without backlight	4.6	9.5

FEATURE

1. 5X8 dots with cursor
2. Built- in controller (SPLC780D or Equivalent)
3. +5V power supply (Also available for +3.0V)
4. 1/16 duty cycle
5. BKL to be driven by pin1,pin2,or pin15,pin16 or A,K
6. N.V. Optional

ABSOLUTE MAXIMUM RATINGS

ITEM	SYMBOL	MIN	MAX	UNIT
POWER SUPPLY (LOGIC)	Vdd	-0.3	7.0	V
POWER SUPPLY (LCD)	V0	Vdd -13.5	Vdd +0.3	V
INPUT VOLTAGE	Vin	-0.3	Vdd +0.3	V

PIN ASSIGNMENT

PIN	SYMBOL	FUNCTION
1	Vss	GND
2	Vdd	Power Supply
3	V0	Contrast Adjust
4	RS	Register Select Signal
5	R/W	Data Read/Write
6	E	Enable Signal
7-14	DB0-DB7	Data Bus Line
15(A)	LED+	Power supply for BKL(+)
16(K)	LED-	Power supply for BKL(-)

MECHANICAL SPECIFICATIONS

CHARACTER NUMBER	16W X 2H	—
OVERALL SIZE	85.00W X 36.00H	mm
VIEWING AREA	63.00W X 16.40H	mm
HOLE - HOLE	80.00W X 31.00H	mm
CHARACTER SIZE	3.00W X 5.23H	mm
CHARACTER PITCH	0.51W X 0.52H	mm
DOT SIZE	0.56W X 0.61H	mm
DOT PITCH	0.05W X 0.05H	mm

ELECTRONICAL CHARACTERISTICS

ITEM	SYMBOL	CONDITION	STANDARD			UNIT
			MIN	TYP	MAX	
Input voltage	Vdd	+5V	4.7	5.0	5.5	V
		+3.3V	2.7	3.0	3.3	V
Supply current	Idd	Vdd=5V	---	1.5	4.0	mA
Recommended LCD driving voltage for normal temp version module	Vdd-V0	0 °C	4.7	5.0	5.5	V
		25 °C	4.3	4.5	4.7	
		50 °C	4.1	4.3	4.5	
LED forward voltage	V_F	25 °C	---	4.2	4.6	V
LED forward current	I_F	25 °C	---	120	---	mA
EL power supply current	EL	AC 400Hz V_{EL} =110V	----	---	---	mA

DISPLAY CHARACTER ADDRESS CODE

Display position	*1 2 3 4 5 6 7 8 9 10 11 12 13 14 15 16*	
DDRAM address	*00 01 02 -- -- -- -- --*	*0F*
DDRAM address	*40 41 42 -- -- -- -- --*	*4F*